1750K

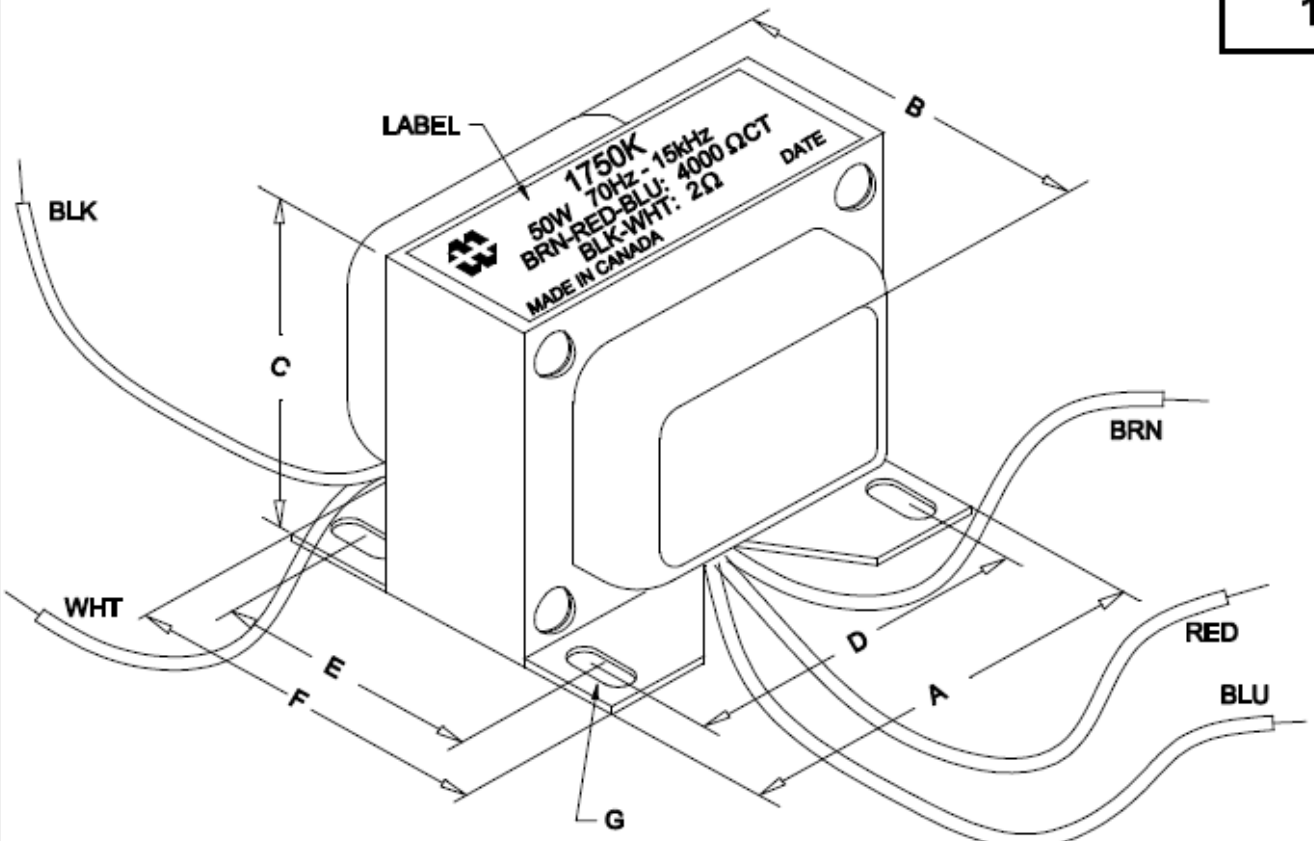

NOTE: ALL LEADS 9.0" OUT MIN.

DIMENSIONS:	
A	4.063" ±0.063
B	3.125" ±0.125
C	3.453" ±0.063
D	3.500" ±0.063
E	2.000" ±0.063
F	2.560" ±0.063
G	0.177"X 0.300" ±0.015

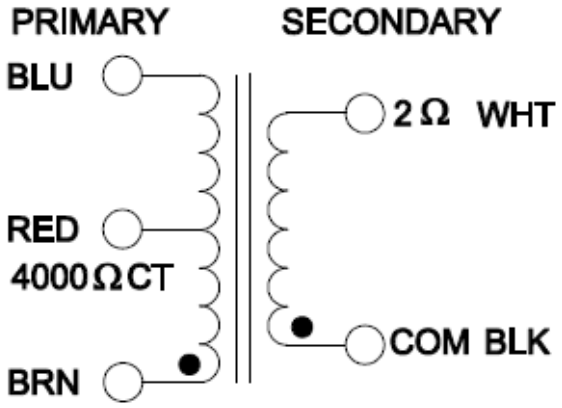

ELECTRICAL DATA:	
Turns ratio:	44.67 : 1
Inductance	@ 240V, 50Hz =>42.44H (Open circuit)
DCR	@ 20°C, BRN - RED =43.15 Ω ±20%
	@ 20°C, RED - BLU =46.28 Ω ±20%
	@ 20°C, BLK - WHT =0.180 Ω ±20%
FREQ. RESP	@ 50W (447V), 70Hz - 15kHz ±1db (1kHz ref)
Pri. Impedance	4000 ΩCT (447V)
Sec. Impedance	2 Ω (10V @ 5A)
Power	50 WATTS